Performance-Based Child Welfare Funding

MDHHS report to Legislature

October 2015

Agenda

- The journey to performance-based funding in Michigan.
- What's next?
- Incentivizing outcomes/metrics.
- Q&A

The journey to performance-based funding in Michigan

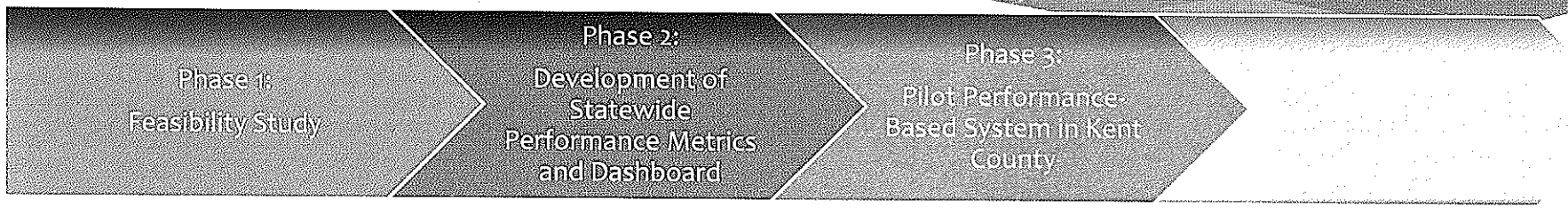

- The child welfare performance-based funding system development was officially initiated in 2013 by the Michigan legislature.
- The system development is organized into the four phases in the chart above.
- The phases are not discrete and overlap in their timelines.
- Accomplishments to date are summarized in the next slides.

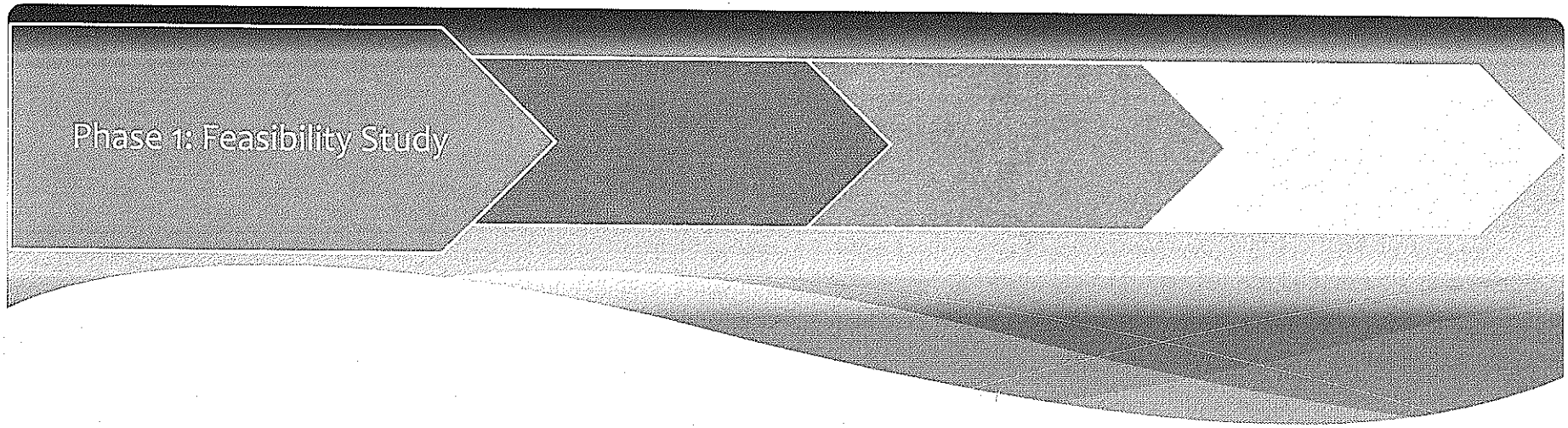

Date	Accomplishments - Phase 1 : Feasibility Study
June 2013	PA 59 of 2013, Article X, Section 503 mandated a feasibility study for performance-based funding in Michigan.
February 2014	Child Welfare Performance-Based Funding task force report was released, indicating a performance-based funding system in Michigan is feasible.

Date	Accomplishments - Phase 2: Development of Statewide Performance Metrics and Dashboard
April 2014	Child Welfare Partnership Council (CWPC) established.
January 2015	Actuary team (PCG and Lewis & Ellis) hired.
April 2015	PBF Project Manager (PCG) hired.
August 2015	Draft Request for Proposal (RFP) for Evaluator sent to Department of Technology Management & Budget (DTMB)for approval, estimated start date March 2016.

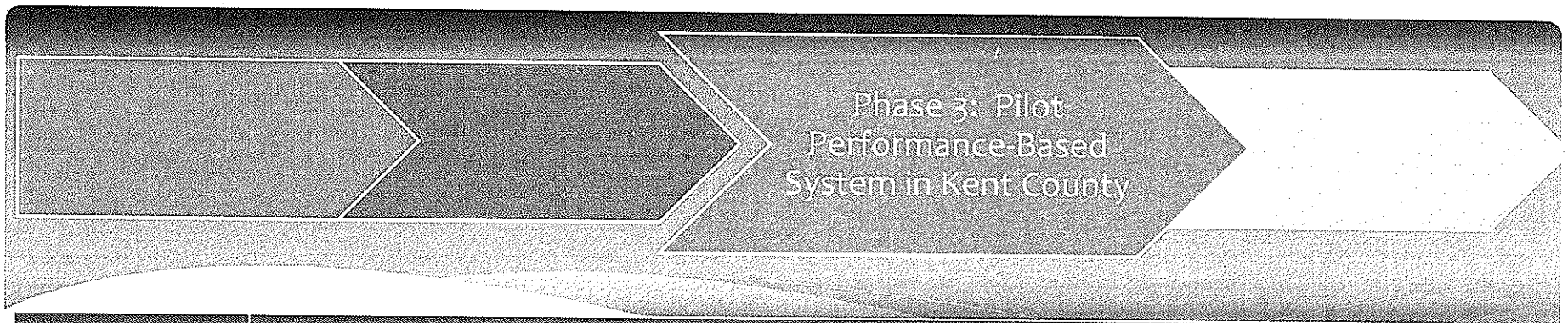

Date	Accomplishments - Phase 3: Pilot Performance-Based System in Kent County
April 2014	Kent County officially selected as first pilot site.
October 2014	Transitioned all remaining DHHS foster care cases to private provider agencies in Kent County.
Spring 2015	Actuary team worked with MDHHS, providers and counties to collect and validate expenditure data for foster care services in Kent County.
July 2015	Actuary team presented first draft of the calculated average cost per child in care in Kent County.

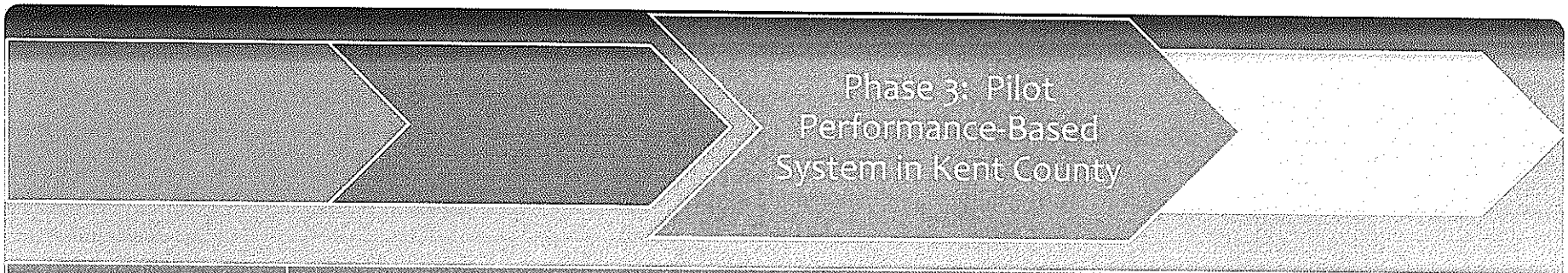

Date	Accomplishments - Phase 3: Pilot Performance-Based System in Kent County
Summer 2015	Actuary team continued work to develop a case rate.
Summer 2015	Continued development of the West Michigan Partnership for Children (WMPC Consortium).
August 2015	MDHHS and providers drafted the Roles & Responsibilities matrix.
September 2015	Actuary team presented first draft of case rate models and has since been incorporating feedback.
September 2015	MDHHS and providers met to confirm performance metrics and to determine methodology for calculation.

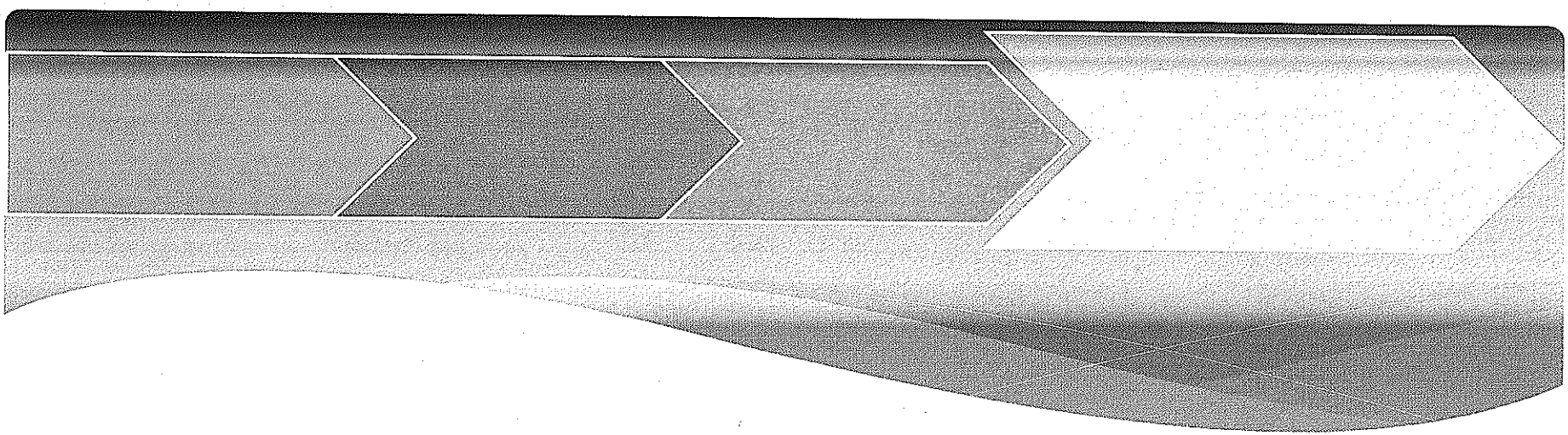

Date	Phase 4: Explore Options For Next Phase of Implementation
Winter 2015	MDHHS will begin exploring options for the next phase of implementation.

What's next?

- Finalize Kent County case rate development.
- Continue supporting the development of the WMPC.
- Finalize the master Roles & Responsibilities matrix for inclusion in contracting discussions and potentially the master agreement.
  - Identify the roles and responsibilities of MDHHS, WMPC, & providers.

What's next?

- Establish a master agreement between the WMPC and MDHHS.
- Identify necessary changes to SACWIS, MDHHS process/procedures, MDHHS staffing/monitoring units.
  - Implement changes.
- Draft and submit a Title IV-E state plan amendment.
  - Must be done before any Title IV-E claims can be made for the pilot.
- Hire evaluator.

Incentivizing outcomes/metrics – what are we testing in the pilot?

The Kent County pilot is focusing on the following goals related to outcomes/metrics for children and youth in out of home care:

- Reduce the occurrence of maltreatment in care.
- Achieve permanency within 12 months for children entering foster care.
- Achieve permanency within 12 months for children who have been in foster care 12 to 23 months.
- Achieve permanency within 12 months for children who have been in foster care for 23 months or longer.
- Increase placement stability.
- Reduce the occurrence of re-entry to foster care within 12 months of exit.

Key Performance Indicators

The Kent County providers will also be held accountable for overarching performance metrics as dictated by federal rules, state rules, the Modified Settlement Agreement, etc.

- This includes the Key Performance Indicators:
  - CPS Initial Worker Contacts
  - Worker/Child Contacts
  - Timely Initial Home Studies and Waivers
  - Medical & Dentals
  - Timely and Thorough Completion of Case Plans
  - Parent/Child Visitation
  - 90 day discharge planning

Incentivizing Outcomes/Metrics

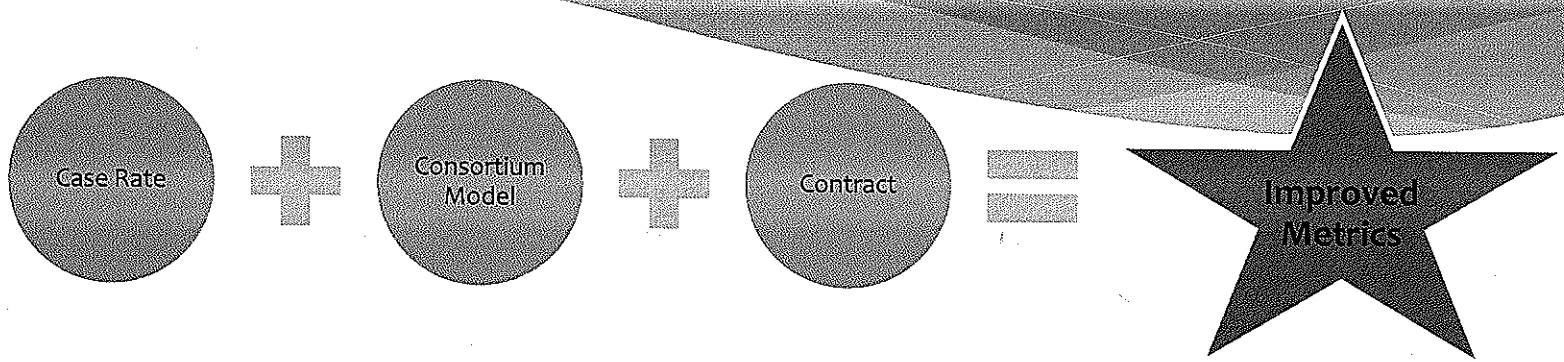

- **Case Rate**: MDHHS will pay the West Michigan Partnership for Children (WMPC) a set case rate for each child under WMPC case management responsibility.
  - The WMPC will need to manage costs in accordance with the fixed case rate.
    - The case rate will be "front loaded" at the beginning of the case and will reduce significantly over the time the child is in care.
    - The WMPC is therefore incentivized to appropriately <u>reduce the level of care</u> and <u>reduce time to permanency</u> to decrease costs and increase savings for reinvestment.

Incentivizing Outcomes/Metrics

Consortium Model: As a consortium, the WMPC can use funds flexibly to incentivize positive outcomes.

- As a private sector nonprofit, the WMPC has more flexibility than DHHS in identifying innovative ways to incentivize provider behavior, including the use of fundraising dollars.

- *Hypothetical example*: The WMPC provides a bonus or other incentive to their contracted service providers who reach established consortium-driven outcomes, such as reduced occurrence of maltreatment in care.

Incentivizing Outcomes/Metrics

Contracting: MDHHS will contract directly with the WMPC for all case management activities and can include in the master agreement specific, required levels of performance in achieving desired outcomes.

- The WMPC will be responsible for ensuring its contracted providers are meeting the requirements in the consortium's contract with MDHHS.
- The contract between the WMPC and MDHHS will outline required outcomes and recourse if outcomes are not met (canceled contract, program improvement plan, etc.).
- *Hypothetical example:* If the contracted providers are not achieving required outcomes, such as placement stability, the WMPC could cancel its contract with those providers (or pursue other recourse). Further, if the WMPC is not achieving outcomes as required in its contract with MDHHS, the state could cancel its contract with the WMPC (or pursue other recourse).

Summary

- Development of a **data-driven draft Kent County case rate** and payment methodologies.
- MDHHS staff at all levels are engaging in the pilot development to help ready the state for the pilot, by **identifying potential barriers and solutions.**
- Strong **collaboration** between various levels of MDHHS state staff and the WMPC.
- Statewide effort continues to balance the need to **achieve better outcomes** for children and families while carrying out the **government's fiduciary duty** to the public.

Q & A

Questions?